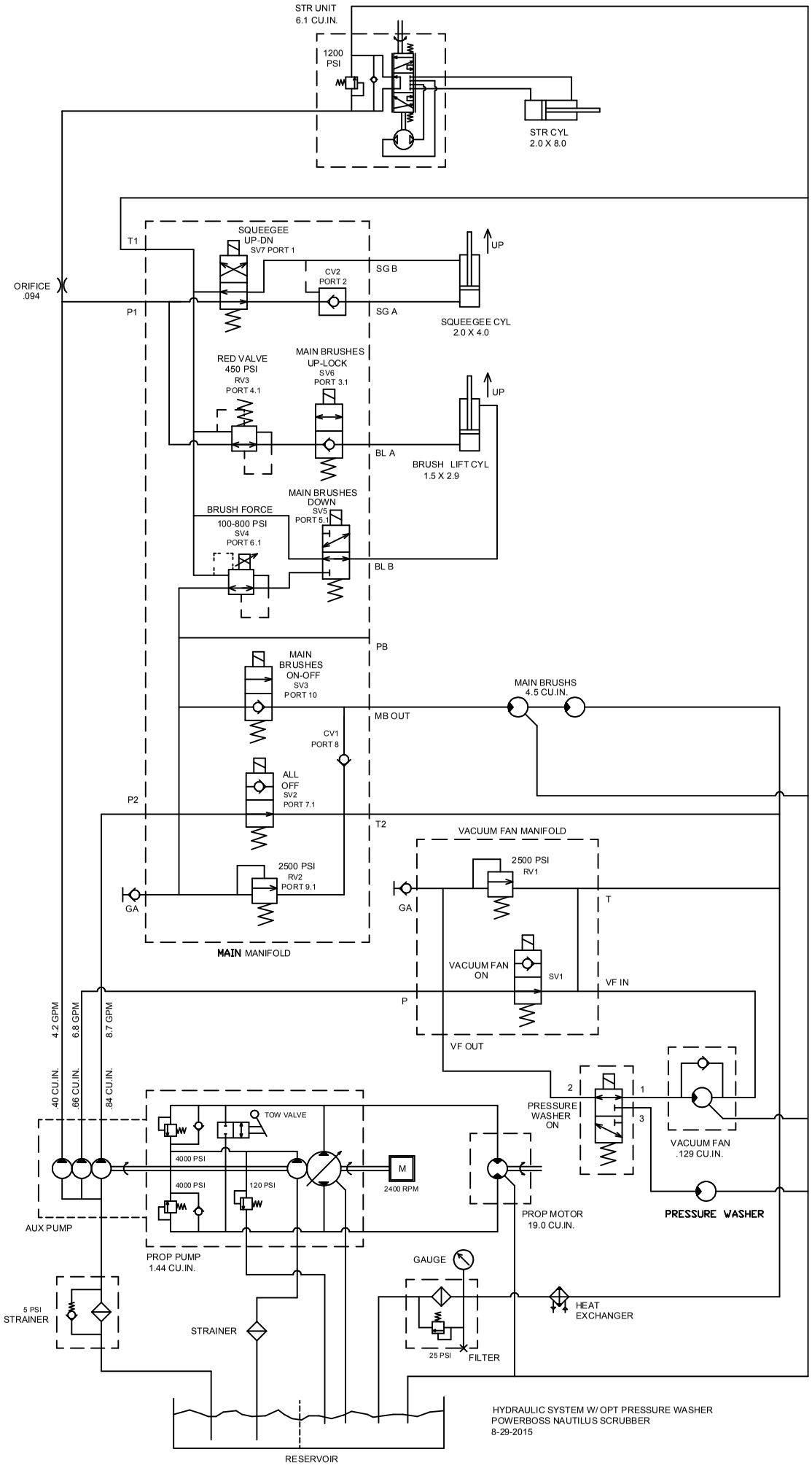

HYDRAULIC SYSTEM W/ OPT PRESSURE WASHER
POWERBOSS NAUTILUS SCRUBBER
8-29-2015